HOBBY

30mm Viper Operating Manual

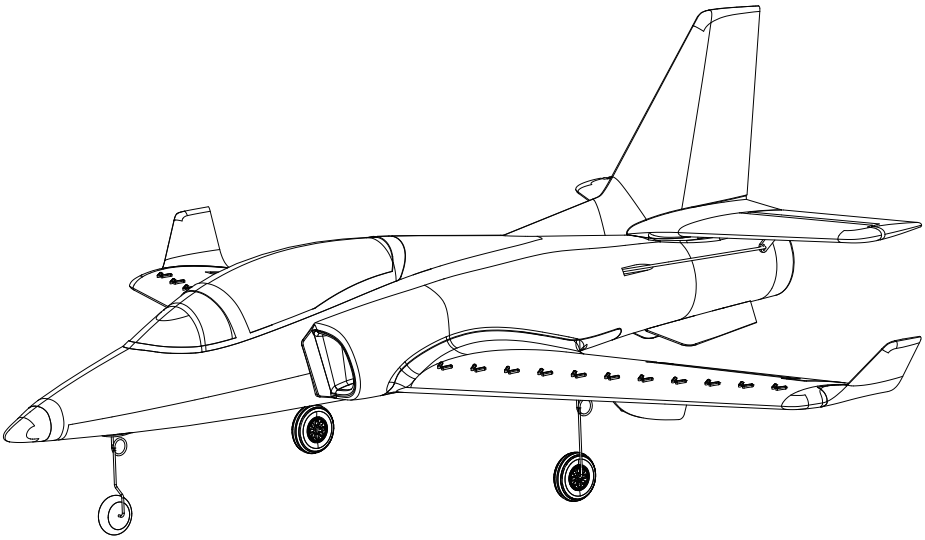

www.arrowshobby.com
modellmarkt24.ch

Warning: This manual contains important information that will help you maintain and operate your model aircraft in a reliable and safe manner. Please read the instructions and warnings carefully prior to assembly, setup or use.

As this model aircraft is a sophisticated hobby product, it must be flown with safety and common sense in mind, failure in doing so may result in injury or property damage. This product is not intended for use by children without direct adult supervision.

Safety precautions and warnings

As the user, you are solely responsible for the safe operation and maintenance of this product. Follow the directions and warnings listed in this manual, as well as that of supporting equipment (chargers, batteries etc.) and always use common sense.

This is not a toy. Not for children under 14 years of age.

★Always operate your model in an open area away from buildings, cars, traffic or people. Never operate near people- especially children who can wander unpredictably. Never operate in populated areas for any reason, where injury or damage can occur.

★Always keep a safe distance in all directions around your model to avoid collisions or injury. This model is controlled by a radio signal subject to interference from many sources outside your control. Interference can cause momentary loss of control.

★Never catch the aircraft while it is in flight, the structure of the fuselage was not designed and protected for this purpose.

★Never operate your model in bad weather, including in excessively windy or precipitating conditions.

★Never operate your model with low transmitter batteries.

★Keep your throttle quadrant in its lowest position prior and after every flight. Use the throttle cut function if able.

★Always use fully charged batteries and move batteries before disassembly.

★Avoid water exposure to all equipment not specifically designed and protected for this purpose.

★Avoid cleaning this product with chemicals.

★Never lick or place any part of your model in your mouth as it could cause serious injury or even death.

★Keep all chemicals, small parts and anything electrical out of the reach of children.

modellmarkt24.ch

Introduction

The Viper has always been a classic aircraft in the RC EDF world, with 50mm-90mm EDFs and even larger sizes available on the market. However, a small-size Viper has been notably absent.
Now, Arrows Hobby officially introduces the 30mm Viper, the first aircraft in the Arrows 30mm EDF series.
Equipped with a 30mm micro brushless EDF, and features a refreshing sport-style livery. Arrows Hobby consistently breaks conventions to deliver unique styles and experiences.
The Arrows Hobby 30mm Viper, benefiting from its compact size, is fully pre-assembled. No structural assembly is required — the aircraft is ready to fly out of the box. Small yet fully equipped, its construction utilizes EPO foam combined with ABS plastic parts.
Powered by an 1110-KV10000 brushless motor with a 12-blade 30mm brushless ducted fan, a 7A built-in ESC, and a 2S 450-500mAh battery. On this micro Viper, you can still find the characteristics of a large EDF jet. The aircraft delivers crisp and clean flight performance, with a clearly audible EDF sound. Combined with two highly recognizable liveries inspired by classic designs, the 30mm Viper will stand out at the flying field.

Configuration Options:
• RTF version: Uses Arrows Hobby Transimitter.
• PNP version: Supports ELRS and SBUS micro receivers.
If you are an EdgeTX radio enthusiast, the PNP version is the one for you.

Features
• 12-blade 30mm EDF equipped with a 1110-KV10000 BL motor.
• Built-in 7A ESC.
• Integrated gyro on both RTF and PNP versions (Optimized Mode/Stabilization Mode).
• PNP main control board supports EdgeTX ELRS micro receivers and SBUS micro receivers.
• Removable wire landing gear.
• Stabilization mode includes hand-launch assist, full throttle hand-launch with automatic pitch-up compensation.

First Flight Tips
• For your maiden flight, choose a sufficiently spacious area, launch in Stabilization Mode, and ensure ample room for maneuvering.
• In windy conditions, maintain throttle above 60% during turns to avoid entering a stall spiral.
• Once familiar with the aircraft's performance, activate Optimized Mode to embark on your flying journey!

Specifications

Wingspan	460mm/18.1in
Overall length	410mm/16.1in
Flying weight	120g
Motor size	1110-KV10000
Wing load	31.1g/dm^2(0.07oz/in^2)
Wing area	3.7dm^2(57.2sq.in)
ESC	RTF Receiver (ESC and GYRO integrated) PNP ESC (GYRO integrated)
Servo	2g servo x 2 3.7g servo x 1
Recommended battery	7.4V 450mah 25C

Kit contents

Before assembly, please inspect the contents of the kit. The photo below details the contents of the kit with labels. If any parts are missing or defective, please identify the name or part number (refer to the spare parts list near the end of the manual) then contact your retail store.

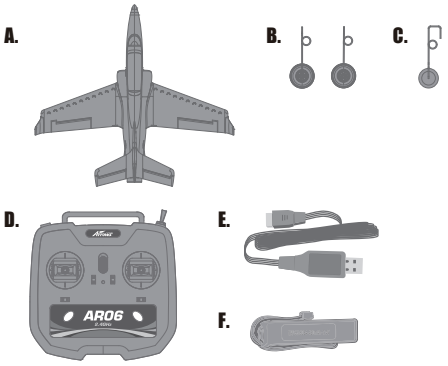

A: Preassembled airframe
B: Main Landing Gear Set
C: Front landing gear
*D: Transmitter (AA Batteries not included)
*E: USB charger
*F: 2S 450mah 25C Battery

Note: Items marked with * indicate that the RTF configuration includes them.

modellmarkt24.ch

Model assembly

1.Install the front landing gear into the slot at the bottom of fuselage.

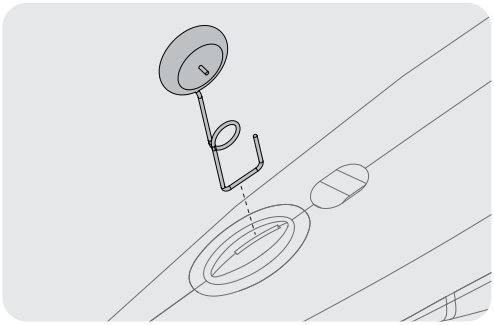

2.Insert the main landing gear assembly into the wing landing gear slot and pivot 90 degrees to lock the landing gear in place.

Note: Main landing gear differs left & right.

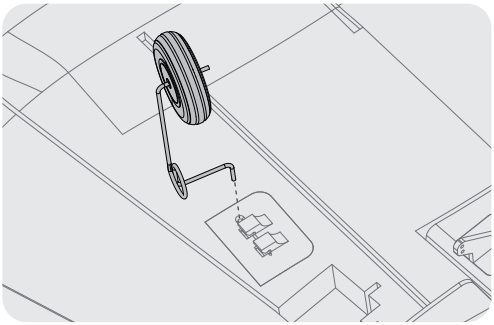

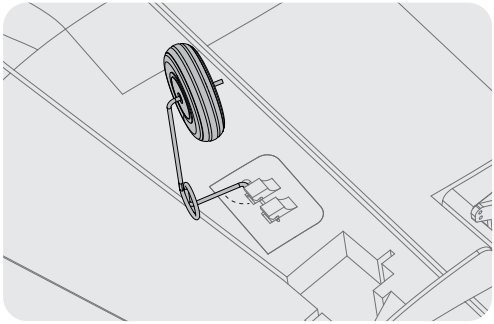

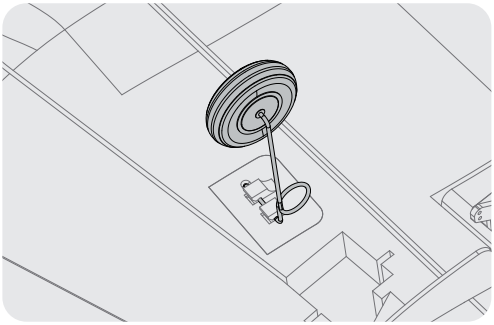

modellmarkt24.ch

Receiver Diagram and Channel Functions

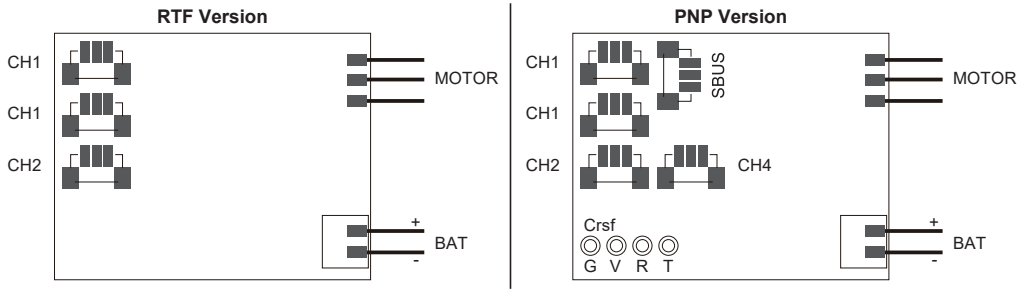

Default Channels:

CH1——Aileron
CH2——Elevator
CH3——Throttle
CH4——Rudder (if equipped)
CH5——Gyro Mode Switch

Transmitter Control Operation

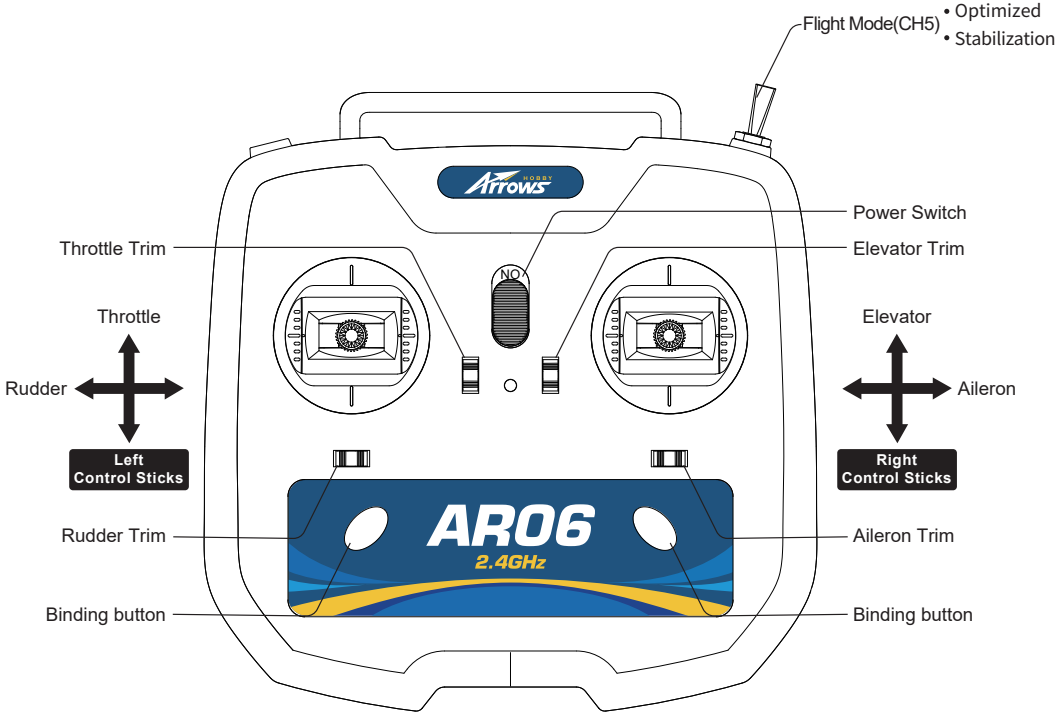

modellmarkt24.ch

Transmitter Binding Operation

RTF:

Note: *aircrafts are pre-bound by the factory. Usually, you don't need to bind the receiver again.*

1. Connect the aircraft to the battery to power it on. The controller light will flash rapidly. Wait until the light changes to a slow flash, indicating it enters the binding mode.
2. Turn on the transmitter, press and hold both left and right binding buttons on the transmitter panel for approximately 3 seconds to enter binding mode. The transmitter indicator light will flash rapidly during binding. Once binding is complete, the transmitter indicator light will remain steady. The aircraft will then begin self-check, indicating successful binding.

PNP:

- If using an ELRS micro receiver, after soldering the four receiver wires, rapidly power cycle the device three times to enter ELRS receiver binding mode. Then bind using your EdgeTX transmitter.
- If using an SBUS micro receiver, connect the included adapter cable from the PNP accessory kit to your receiver. Refer to your transmitter's manual for SBUS setup instructions.

Battery Installation

1. Remove the battery hatch.
2. Remove the hook and loop tape from the fuselage.Apply the looped surface to the battery.
3. Install the battery into the fuselage.

Note:
The weight of each battery may vary due to different manufacturer. Move the battery fore or aft to achieve the optimal center of gravity.

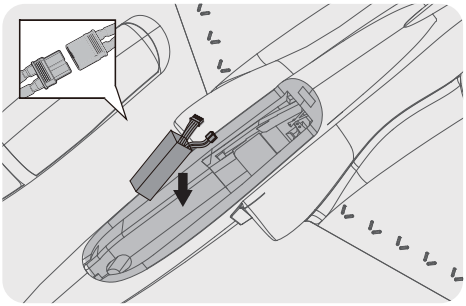

Finding the center of gravity

Finding the correct center of gravity is critical in ensuring that the aircraft performs in a stable and responsive manner. Please adjust the weight distribution so the aircraft balances in the range stated on the diagram.

• Depending on the capacity and weight of your choosen flight batteries, move the battery forward or backward to adjust the center of gravity.
• If you cannot obtain the recommended CG by moving the battery to a suitable location, you can also install a counter-weight to achieve correct CG. However, with the recommended battery size, a counterweight is not required. We recommend flying without unnecessary counterweight.

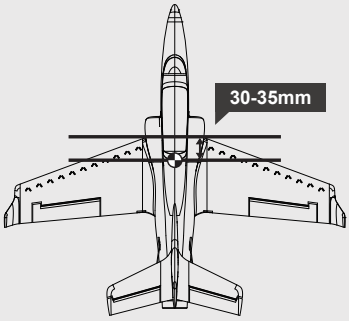

modellmarkt24.ch

ESC Throttle Range Description Instructions

Note:
To ensure the ESC adapts to your transmitter's throttle range，the throttle range must be re-set when using this ESC for the first time or when switching to a different transmitter.

RTF configurations are factory-calibrated with throttle range and usually calibration is not required.

Throttle Range Setting Instructions(PNP)：
1. Turn on the transmitter and move the throttle stick to the highest position.
2. Connect the battery to the ESC and wait for the aircraft self-check.
3. The aileron and elevator will automatically move up and down twice, indicating that the self-check is complete.
4. After the self-check is complete, wait for 2 seconds, then move the throttle stick to the lowest position and wait for 5 seconds. (No audible prompt from the ESC is normal.)
5. Now push the throttle to check whether the range is correct. If it is not correct, please repeat the above steps.

Control Surface Test

After assembly and prior to your first flight, make sure all control surfaces respond correctly to your transmitter by referring to the diagram below.

Note: During control surface test, ensure the throttle stick is positioned at its lowest position to prevent accidental motor activation and potential accidents.

Aileron

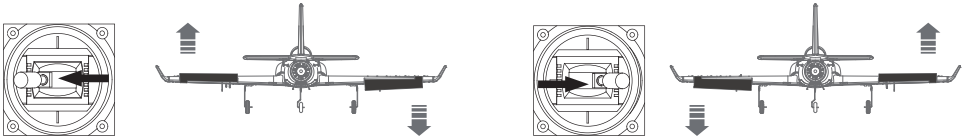

Elevator

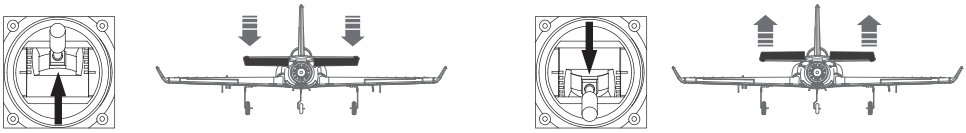

Control Horn And Servo Arm Settings

1. The table shows the factory settings for the control horns and servo arms. Fly the aircraft at the factory settings before making changes.
2. After flying, you may choose to adjust the linkage positions for the desired control response.

	Horns	Arms
Elevator	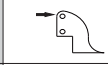	
Ailerons	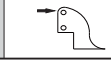	

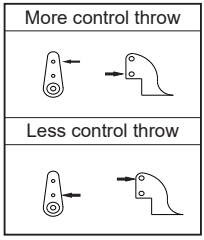

modellmarkt24.ch

Flight Mode Check

Flip the flight mode switch (CH5) to the stabilization position, then move the aircraft as shown in the diagram to verify the stabilization function and control surface correction direction.

*Tilt the aircraft to the right and observe the aileron response.
The left aileron should perform a upward correction, the right aileron should peform a downward correction.

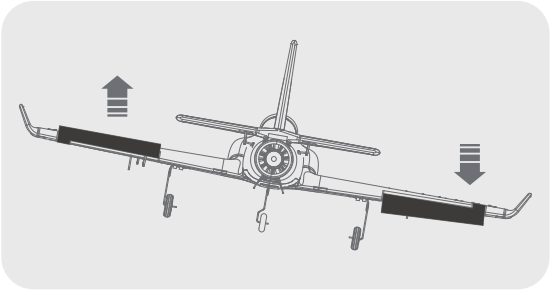

*Lift the tail and observe the elevator response.
The elevator should perform a upward correction.

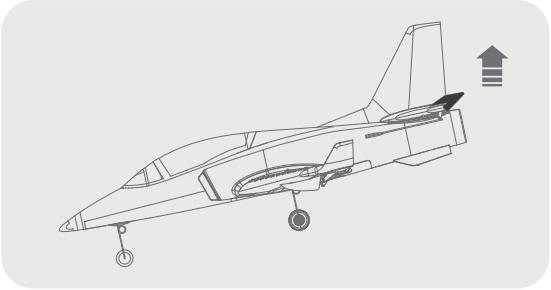

Hand-launch Tips

The aircraft features a hand-launch assist function. We recommend holding the aircraft as shown, keeping the wings level, and tossing it upward with the nose slightly elevated.
Procedure:
1. Ensure the aircraft is in Stabilization Mode.
2. Increase throttle to 100%.
3. Launch using the correct technique described above.
4. The aircraft will automatically stabilize horizontally and compensate with the necessary elevator input.
5. After climbing for a few seconds, the hand-launch assist will automatically turn off.

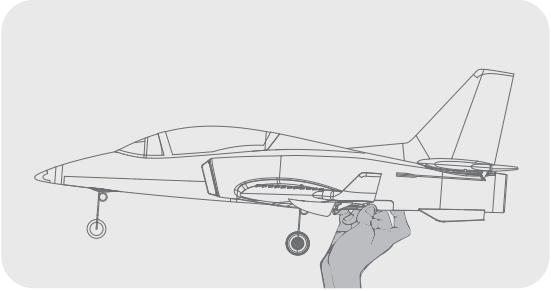

modellmarkt24.ch

Control throws

The suggested control throw setting for the 30mm Viper are as follows:

Tips: The maiden flight should always be flown using low rates, fly the aircraft until you are familiar with its characteristics prior to trying high rates. Make sure the aircraft is flying at a decent altitude and speed prior to using high rates, as the aircraft will be sensitive to control inputs with the larger control surface movements.

	High Rate	Low Rate
Elevator	8mm up / down	6mm up / down
Aileron	6mm up / down	4mm up / down

Flight Checklist (Final Pre-Flight Check)

At this stage, you will perform a final inspection of the environment and aircraft functions, just like a real pilot, to ensure a safe operation.

☐ Environment: Wind speed is below Beaufort Scale 2. Flight area must be clear of people, buildings, and power lines.
☐ Structure: Verify all structural components are securely installed.
☐ Battery: Aircraft battery must be fully charged (full voltage = 4.2V × number of cells; e.g., 2S = 4.2V × 2 = 8.4V).
☐ Signal: Transmitter and receiver have established communication (The receiver indicator light steady on, control surfaces respond to input).
☐ Control Surfaces: All control surfaces deflect in the correct direction.
☐ Gyro Correction Direction: All control surfaces correct in the correction direction.
☐ Center of Gravity: Center of gravity falls within the recommended range.
*Note: It is recommended to develop a thorough pre-flight check habit before every flight.

Troubleshooting

Problem	Possible Cause	Solution
Aircraft will not respond to the throttle but responds to other controls.	• ESC is not armed. • Throttle channel is reversed.	• Lower throttle stick and throttle trim to lowest settings. • Reverse throttle channel on transmitter.
Excessive vibration or propeller noise.	• Damaged spinner, propeller, motor or motor mount. • Loose propeller and spinner parts. • Propellor installed backwards.	• Replace damaged parts. • Tighten parts for propeller adapter, propeller and spinner. • Remove and install propeller correctly.
Reduced flight time or aircraft underpowered.	• Flight battery charge is low. • Propeller installed backward. • Flight battery damaged.	• Completely recharge flight battery. • Replace flight battery and follow flight battery instructions.
Control surfaces unresponsive or sluggish.	• Control surface, control horn, linkage or servo damage. • Wire damaged or connections loose.	• Replace or repair damaged parts and adjust controls. • Do a check of connections for loose wiring.
Controls reversed.	• Channels are reversed in the transmitter.	• Do the control direction test and adjust controls for aircraft and transmitter.
Motor loses power Motor power pulses then motor loses power.	• Damage to motor, or battery. • Loss of power to aircraft. • ESC uses default soft Low Voltage Cutoff(LVC).	• Do a check of batteries, transmitter, receiver, ESC, motor and wiring for damage(replace as needed). • Land aircraft immediately and recharge flight battery.

modellmarkt24.ch

Spare parts list

AHRE101RRD	30mm Viper Fuselage (RED)	AHRE109	30mm Viper Wire Landing Gear Set
AHRE101PPL	30mm Viper Fuselage (PURPLE)	AHDFX004	30mm Ducted Fan(12-Blade)
AHRE102RRD	30mm Viper Main wing (RED)	AHEDF004	30mm 12 Blade Ducted Fan w/ motor
AHRE102PPL	30mm Viper Main wing (PURPLE)	AHSFB004	30mm Single Fan Blade (12-blade)
AHRE103RRD	30mm Viper Horizontal stabilizer (RED)	AHSDX004	30mm Single Duct(12 Blade)
AHRE103PPL	30mm Viper Horizontal stabilizer (PURPLE)	AHKVX10000	Brushless motor 1110-KV10000
AHRE104RRD	30mm Viper Sticker (RED)	AHSER031	2g digital gear servo positive with 180mm wire (SH1.0 Plug)
AHRE104PPL	30mm Viper Sticker (PURPLE)	AHSER032	3.7g digital gear servo positive with 60mm wire (SH1.0 Plug)
AHRE105	30mm Viper Canopy	AHRXX005	30mm Viper RTF Receiver (ESC and GYRO integrated)
AHRE106	30mm Viper Linkage rods	AHESC015	30mm Viper PNP ESC (GYRO integrated)
AHRE107	30mm Viper Control horns	AHBAT009	7.4V 450mAh 25C Battery (XT30 Plug)
AHRE108	30mm Viper Bottom Plastic Parts		

modellmarkt24.ch

重要提示：

1. 在组装、调整及飞行前请务必认真阅读产品说明书以熟知产品的特性。请严格按照说明书提示进行飞机的组装、调整及飞行。
2. 模型不是玩具，具有一定的危险性，操作者需要具备一定的飞行经验，初学者请在专业人士指导下操作。
3. 禁止十四岁以下儿童在任何情况下操作、飞行。

警告

★作为用户，您对本产品的安全操作和维护负全部责任。请始终严格遵照产品指导说明及安全警告操作本产品及其相关配置（例如遥控器、充电器、电池等）。

★本产品由无线电遥控器控制，在飞行过程中，可能会受到外界强信号源干扰而导致失控，甚至坠机，因此，在飞行过程中务必始终与飞机保持一定的安全距离，避免意外碰撞、受伤。

★请勿随意暴露置放模型飞机的电子产品，尤其是电池，存放时请务必保证周围三米之内无易燃易爆物体。

★在任何情况下，都务必保证油门杆处于起始位、发射机处于通电状态时，才能连接模型飞机内部的动力电池。

★在任何情况下，都不要尝试用手去回收飞行中的模型飞机，必须要等模型飞机降落停稳以后，再进行回收。

★请勿在公路、人群、高压线密集区、机场附近及其它法律法规明确禁止飞行的场合飞行。

★请勿在雷雨、大风、大雪或者其它恶劣气象环境下飞行。

★请勿将相关化工类产品、零部件、电子部件等置于儿童可触及的范围。

★请勿将本产品尤其是未经特别设计和保护的电子件暴漏于潮湿的环境中，以免造成损坏。

★请勿将本品任意处置于口中，以免造成人身伤亡。

★请勿在发射机电池低电量的情况下操纵模型飞机。

★请勿在配件未充分冷却的情况下触碰或移动。

★请勿使用化学制剂擦拭清洁本产品。

★务必保证飞机在整个操作过程中始终在视线范围和遥控控制距离内。

★务必保证在拆卸飞机之前移除电池。

★务必保证所使用的电池是满电状态。

★务必保证所使用的所有线束完好无损。

modellmarkt24.ch

飞机简介

毒蛇一直是RC航模的经典机型，市面上有存在50mm-90mm涵道甚至更大的尺寸，但偏偏还没有小尺寸的机型，现在Arrows Hobby隆重推出30mm毒蛇，作为Arrows Hobby 30mm涵道系列的第一台飞机。

30mm微型无刷涵道，令人耳目一新的运动涂装，Arrows Hobby 总是愿意不拘一格，给大家带来不一样的风格和体验。

Arrows Hobby的30mm毒蛇，得益于机体的小尺寸，整机采用完全预装的方式，出厂即安装完毕，开箱即准备飞行，飞机到手不需要任何的结构组装！飞机虽小，五脏俱全；结构上，全机使用EPO泡沫+ABS工程塑胶材料；动力上，配备了1110-KV10000无刷电机，配合12叶30mm无刷涵道，7A的内置电调，搭配2S 450-500mah左右的电池，你将会发现，在这架微型毒蛇上，竟然能看到大型涵道机的影子，飞行动作干脆利落，涵道声浪清晰可辨。再配合两款致敬经典的高辨识度涂装，你一定能在飞场吸引所有人的目光！

RTF配置使用Arrows Hobby自有遥控协议；PNP配置支持ELRS和SBUS接收机，如果你是一个开源遥控玩家，那PNP绝对是最适合你的版本！

特征：

- 12叶30mm涵道，搭配1110-KV10000无刷电机
- 内置7A电调
- RTF和PNP版本均内置陀螺仪（增稳、自稳）
- PNP版本主板支持开源ELRS微型接收机和SBUS微型接收机
- 钢丝起落架可拆装
- 自稳模式自带手抛起飞辅助，满油门手抛自动补偿抬头

首次飞行贴士：

- 首飞推荐在足够宽阔的场地，使用自稳模式起飞，并预留足够的转向空间。
- 若场地有较大的风，转弯时尽量保持油门在60%以上，否则容易进入失速螺旋。
- 熟悉飞机性能后，便能开启增稳模式，开启您的飞行之旅！

产品基本参数

翼展	460mm
机身长	410mm
飞行重量	120g
电机	1110-KV10000
翼载荷	31.1g/dm²
翼面积	3.7dm²
电调	RTF接收机(电调、接收、陀螺仪三合一集成) PNP电调板(集成陀螺仪)
舵机	2g塑胶舵机*2 3.7g塑胶舵机*1
推荐电池	7.4V 450mah 25C

！注意：此处各项参数，均是使用原装配置测试得出，如果使用他厂配件，会有所差异。使用他厂配件时所产生的问题，我司将无法给予技术支持。

产品包装清单

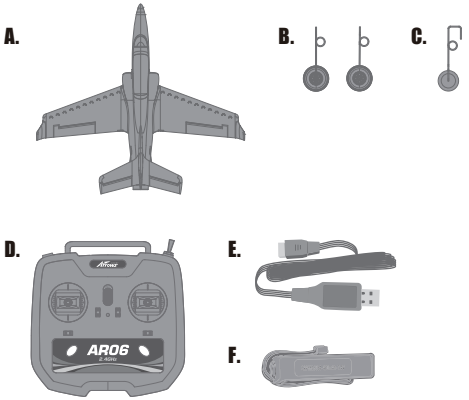

A: 飞机
B: 主起落架组
C: 前起落架
D: 遥控器(RTF版本) *遥控器不含电池
E: USB充电器(RTF版本)
F: 动力电池(RTF版本)

modellmarkt24.ch

起落架安装

1.如图所示，将前起落架安装至机头底部槽位。

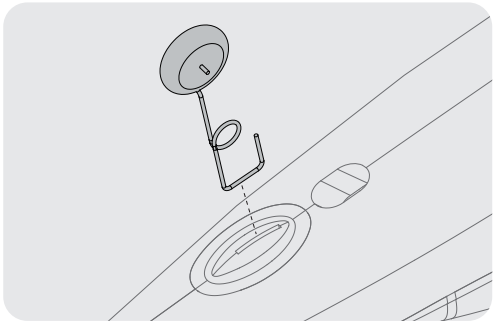

2.将主起落架插入主翼起落架槽中，并旋转90度以锁定起落架位置。(注意：主起落架区分左右)

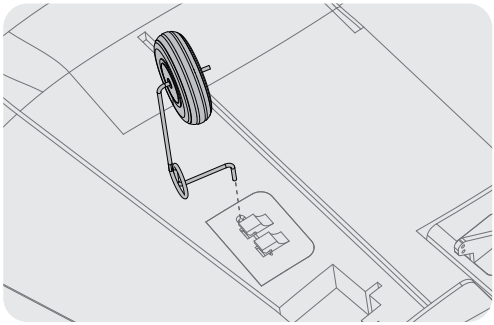

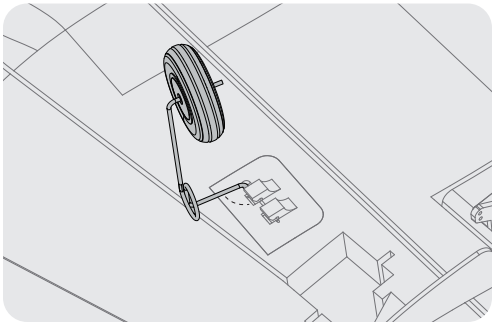

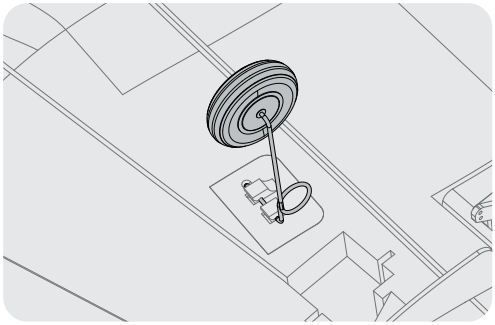

modellmarkt24.ch

接收机接线示意图及通道功能

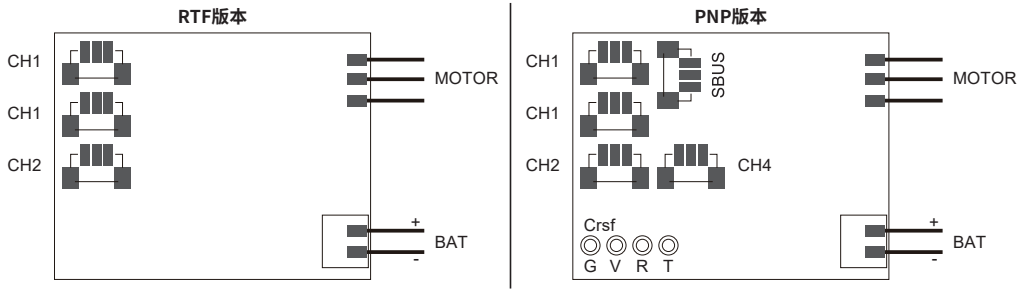

默认通道：

CH1——副翼
CH2——升降舵
CH3——油门
CH4——尾舵（若有）
CH5——陀螺仪模式切换

遥控器操作及对频方法

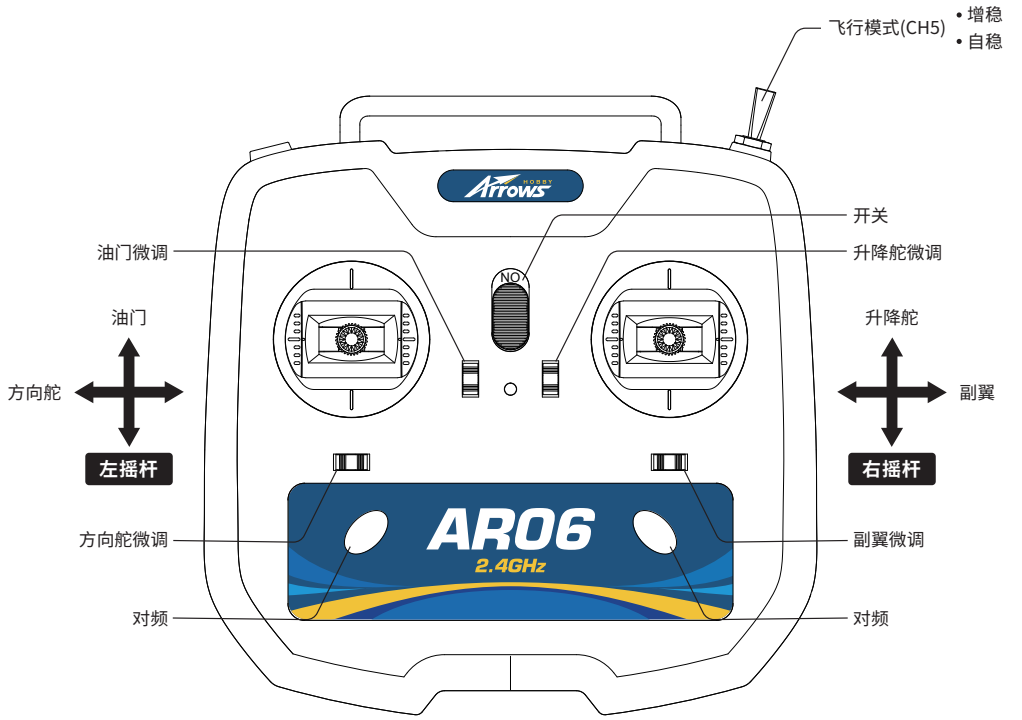

modellmarkt24.ch

遥控对频操作

RTF:

RTF配置出厂均完成对频，一般情况下不需要重新对频。

1. 先给飞机接上电池通电，主板指示灯为快闪，等待指示灯变为慢闪，此时进入对频模式。
2. 打开遥控器，同时长按遥控器面板上左右两个对频键约3秒进入对频，此时遥控器指示灯快闪，对频完毕后，遥控器指示灯常亮，飞机开始自检，此时对频成功。

PNP:

- 若您使用ELRS微型接收机，请在焊好接收机的4根线后，快速上电断电3次，即进入ELRS接收机对频状态，再使用您的开源遥控器对频即可。
- 若您使用SBUS模式的微型接收机，请利用PNP版本配件包内的转接线连接至您的接收机，并查阅您的品牌遥控器说明书获取SBUS设置方法。

电池安装

如图所示，安装厂家推荐型号电池至电池舱，使用所附魔术带或魔术贴固定。

注意：

由于不同电池厂家生产的电池重量有轻微的差异，需要调整电池的前后位置来平衡飞机的重心位置。

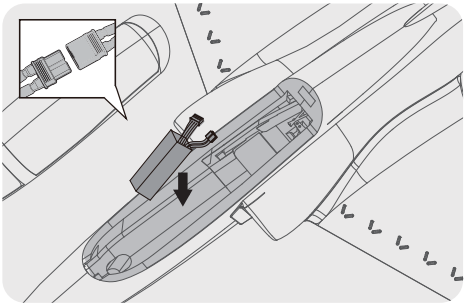

重心位置

本产品的重心在机翼前缘向后 30-35mm 的位置。玩家需要通过移动电池在电池舱里的前后位置或者使用配重块来调整重心。请务必确保，在调整飞机重心的时候，飞机处于组装完毕待飞的状态。

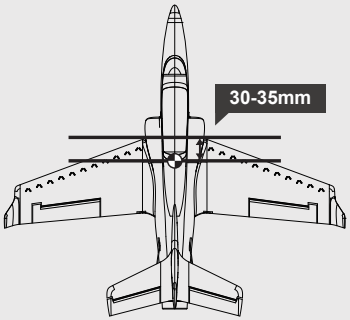

modellmarkt24.ch

电调油门行程说明

注意：

为了让电调适应你的遥控器油门行程，在首次使用本电调或更换其他遥控器使用时，均应重新设定油门行程。

RTF配置出厂均完成油门行程校准，一般情况下不需要再次校准。

油门行程设定说明(PNP)：

1. 开启遥控器，将油门打到最高点。
2. 将电调接上电池，等待飞机自检。
3. 副翼和升降舵分别自动上下动作两次，表示自检完成。
4. 自检完成后，等待2秒，把油门拉到最低，等待5秒。(注：电调没有声音提示是正常的)
5. 此时可以推油门检查行程是否正确，若不正确请重复以上步骤 。

舵面测试

在计划飞行之前，需要使用遥控器测试每个舵面的工作情况，确保摇杆动作与各个舵面动作的对应关系如下图所示：

注意：在舵面调试中，请务必将油门摇杆置于最低位，以免电机意外启动发生事故。

副翼

副翼摇杆
向左运动

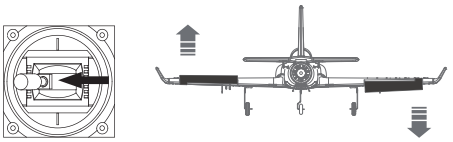

副翼摇杆
向右运动

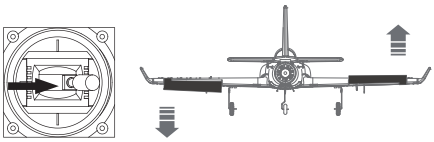

升降舵

升降摇杆
向上运动

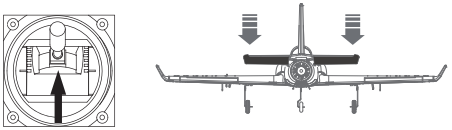

升降摇杆
向下运动

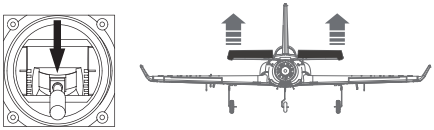

舵角安装

图示是出厂设置，首飞建议直接使用出厂设置，完成首飞以后，根据个人情况以及对航模的熟知程度自行调整。

	舵角	摇臂
平尾		
副翼		

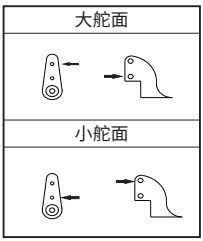

modellmarkt24.ch

陀螺仪舵面修正检查

拨动飞行模式开关（CH5）至自稳档，并按图示摆动飞机，确认陀螺仪自稳功能和舵面修正方向。

*使飞机往右倾斜，观察副翼动作，
左副翼应向上修正，右副翼应向下修正。

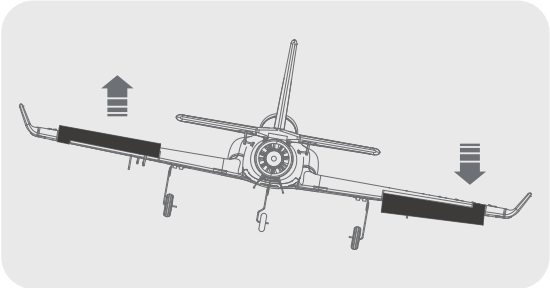

*抬起飞机机尾，升降舵应向上修正。

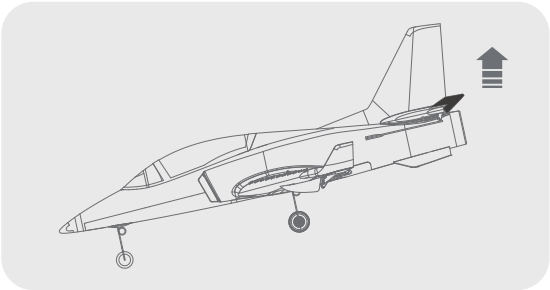

手抛贴士

本机配备手抛起飞辅助功能，建议如图持握飞机，
并保持机翼水平，机头略微向上抛出。
步骤:
1.确保在自稳模式。
2.把油门加到100%。
3.用上述正确的手法抛出。
4.飞机会自动水平稳定并补偿必要抬头输入。
5.爬升几秒后，手抛起飞辅助自动关闭。

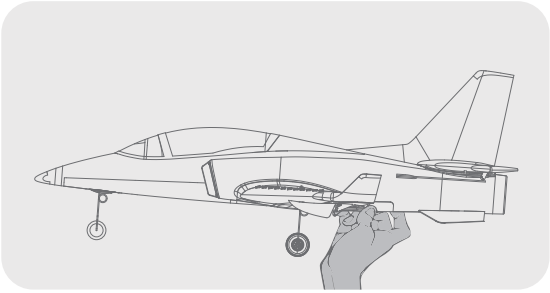

modellmarkt24.ch

舵面行程

本产品舵面行程参数如右图所示：
请注意，舵量越大，模型飞机的动作响应越快，动作幅度越大。首飞建议使用小舵量。然后根据个人情况以及对模型飞机的熟知程度调整舵量。

	大	小
升降舵	8mm 上 / 下	6mm 上 / 下
副翼舵	6mm 上 / 下	4mm 上 / 下

飞行检查单(起飞前最后确认)

到这一步，你将会需要像真实的飞行员一样，对环境和飞机的功能做最后的检查，以确保安全。

☐ 环境：风速小于2级，飞行范围远离人群、房屋及高压线。
☐ 结构：确认机体结构件安装紧固。
☐ 电量：飞机电池电量充足（满电电压为4.2V*电池S数，如2S为4.2V*2=8.4V）。
☐ 信号：遥控器与接收机已成功通信（指示灯常亮，舵面操控有响应）。
☐ 舵面检查：各舵面偏转方向正确。
☐ 陀螺仪修正方向： 各舵面修正方向正确。
☐ 重心检查：重心在推荐范围内。
☰ 建议每次飞行前都养成良好的检查习惯。

故障快速处理

问题	问题原因	解决方式
油门推杆无响应，但舵机有响应	——电调未连接电机 ——油门通道反向	——降低油门推杆和油门微调设定 ——反过来重新装油门通道
桨的噪音过大或者震动过大	——桨罩、桨、电机、电机架坏了 ——桨或者桨罩的小部件松动了 ——桨装反了	——更换损坏的配件 ——把桨、桨夹和桨罩的小部件拧紧 ——反过来重新装桨
飞行时间变短，飞机无力	——电池电量低 ——桨装反了 ——电池坏了	——重新给电池充电 ——依照电池说明书更换新的电池
飞舵面不动，或者动作响应较慢	——舵面、舵角、连接杆、舵机坏了 ——连接线坏了或者接头松了	——更换或者维修坏了的配件 ——检查所有连接线，确保所有接头无松动现象
舵面反向	——遥控器发射机通道反向	——检查通道控制（舵面）方向，调试飞机舵面和遥控器的舵面控制杆
电机无力	——电机或电池坏了 ——电调用了不合适的低压保护装置	——检查电池、发射机、接收机、电调、电机是否有损坏（如有，请及时更换） ——立刻操控飞机降落，重新给电池充电

modellmarkt24.ch

配件列表

AHRE101RRD	机身 (红色)	AHRE109	钢丝起落架组
AHRE101PPL	机身 (紫色)	AHDFX004	30mm涵道 (12叶)不含电机
AHRE102RRD	主翼 (红色)	AHEDF004	30mm涵道组12叶-含1110-KV10000电机
AHRE102PPL	主翼 (紫色)	AHSFB004	30mm 涵道单扇叶 (12叶)
AHRE103RRD	平尾 (红色)	AHSDX004	30mm 涵道筒 (12叶)
AHRE103PPL	平尾 (紫色)	AHKVX10000	1110-KV10000 电机
AHRE104RRD	贴纸 (红色)	AHSER031	2g塑胶数码正向舵机L=180mm (SH1.0插头)
AHRE104PPL	贴纸 (紫色)	AHSER032	3.7g塑胶数码正向舵机L=60mm (SH1.0插头)
AHRE105	座舱	AHRXX005	RTF接收机 (电调、接收、陀螺仪三合一集成)
AHRE106	连接钢丝组	AHESC015	PNP电调板 (集成陀螺仪)
AHRE107	舵角组	AHBAT009	7.4V 450mAh 25C 电池 (XT30插头)
AHRE108	底部防摩擦塑胶件		

modellmarkt24.ch

MADE IN CHINA

modellmarkt24.ch